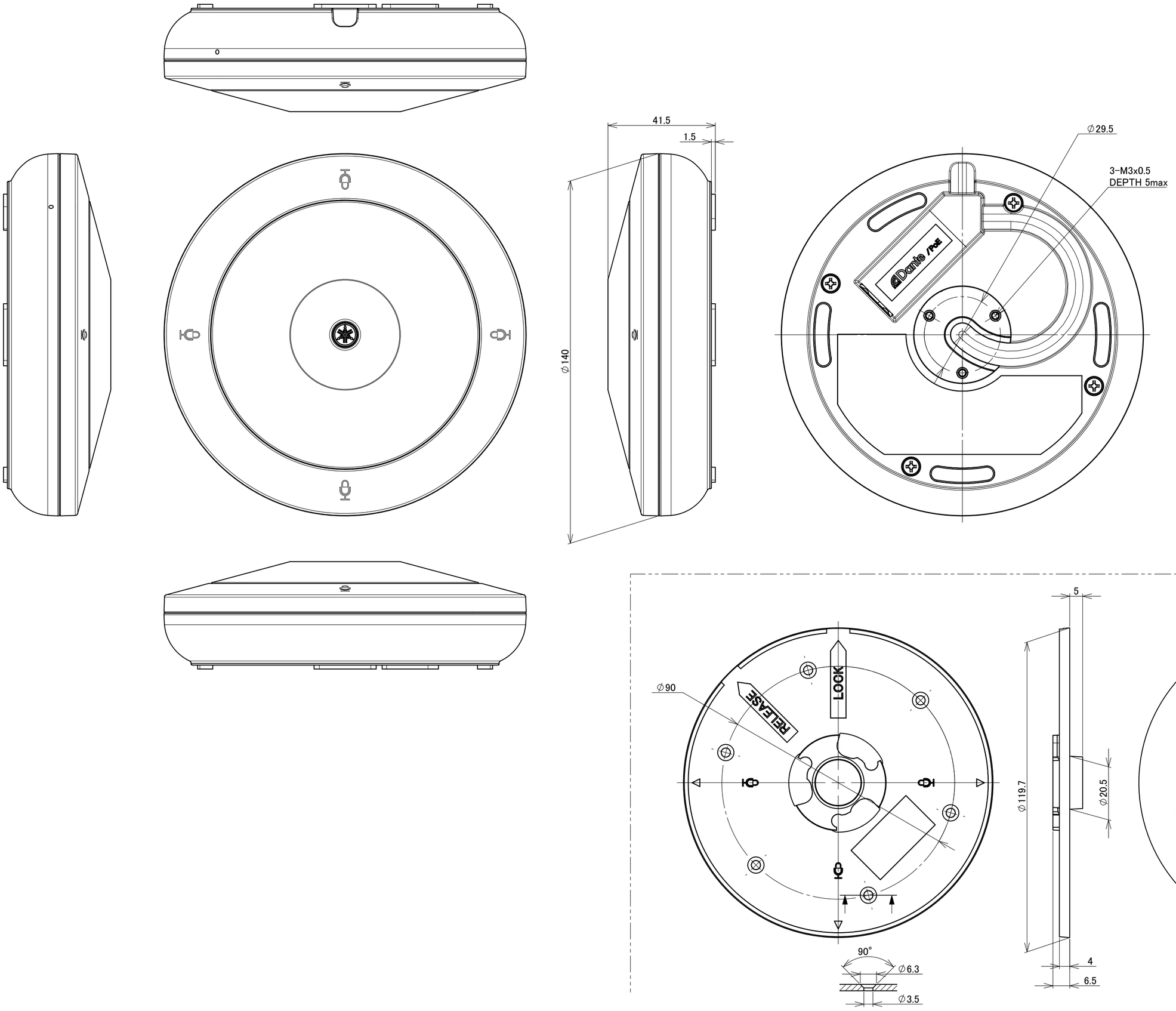
41.5
1.5
ϕ140
ϕ29.5
3-M3x0.5
DEPTH 5max
Dante
PoE
LOCK
RELEASE
ϕ90
90°
ϕ6.3
ϕ3.5
5
ϕ119.7
ϕ20.5
4
6.5